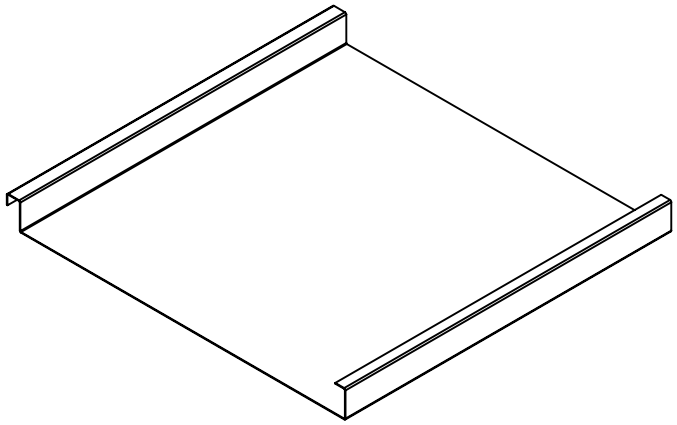

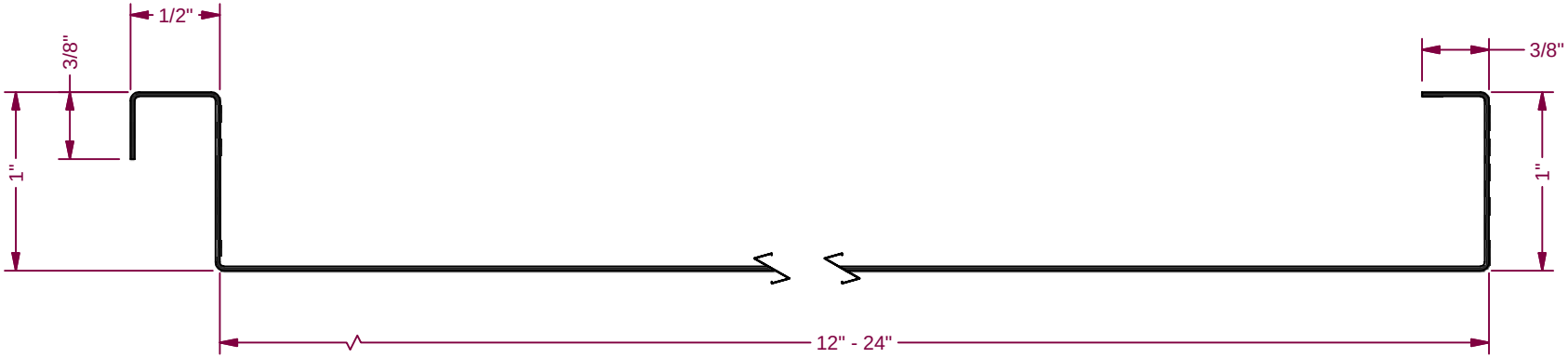

NOTE:
MATERIAL USAGE: 3"

MATERIAL	LENGTH	FINISH

REVISION HISTORY	REV	ECN NO.	DATE	RELEASED BY

TOLERANCES
.XX = ± .01
.XXX = ± .005
FRACTION = ± 1/32"
ANGLE = ± 1/2°

NEW TECH MACHINERY CORP.

DRAWN BY: SAWYER	PART NAME: SS100 PANEL PROFILE		
DATE: 9/11/2002			
CHECK BY	SIZE: A	SHEET: 1 OF 1	REVISION: 0
DATE	SCALE: NONE	PART NUMBER: SS100	