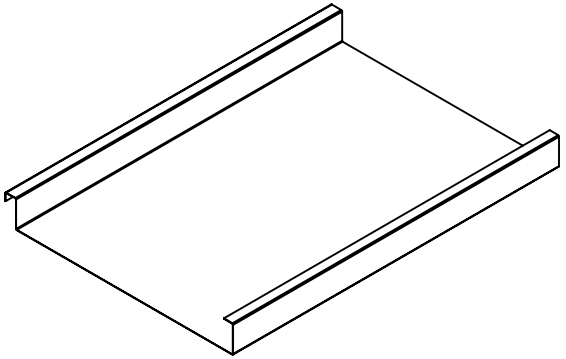

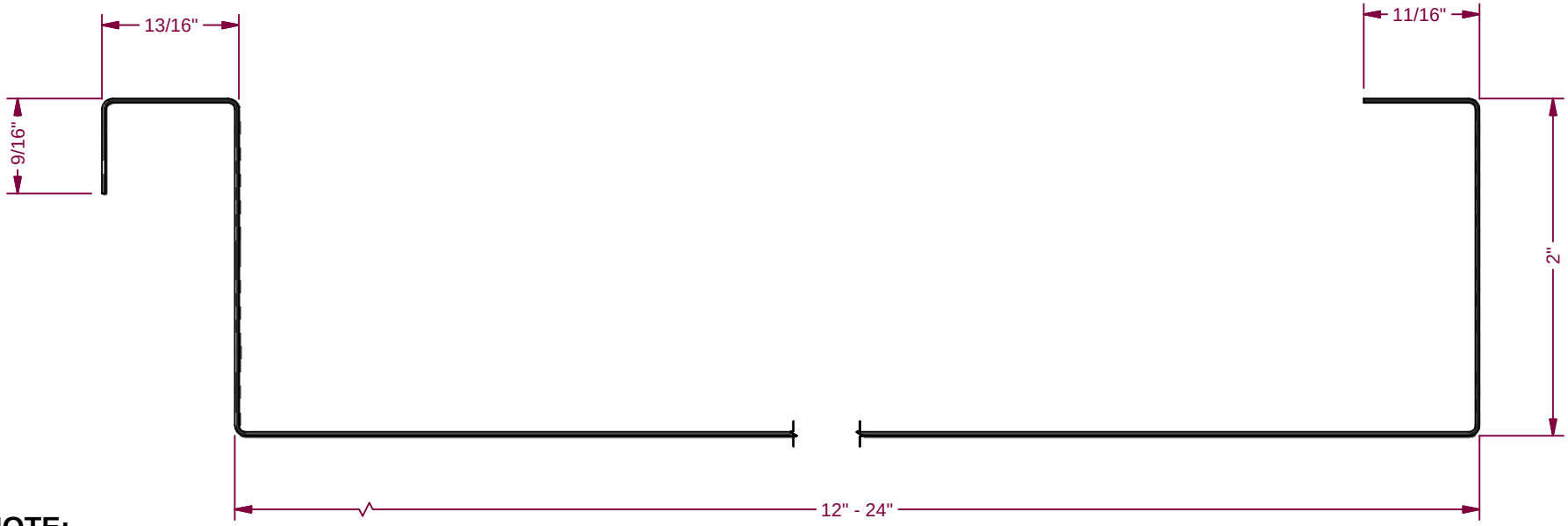


**NOTE:**
MATERIAL USAGE: 5 13/16"

| MATERIAL | LENGTH | FINISH |
|---|---|---|
| | | |

| REVISION HISTORY | REV | ECN NO. | DATE | RELEASED BY |
|---|---|---|---|---|
| | | | | |
| | | | | |
| | | | | |
| | | | | |
| | | | | |

TOLERANCES
.XX = ± .01
.XXX = ± .005
FRACTION = ± 1/32"
ANGLE = ± 1/2°

**NEW TECH MACHINERY CORP.**

| | | | |
|---|---|---|---|
| DRAWN BY SAWYER | PART NAME SS200 PANEL PROFILE | | |
| DATE 9/11/2002 | | | |
| CHECK BY | SIZE A | SHEET 1 OF 1 | REVISION 0 |
| DATE | SCALE NONE | PART NUMBER SS200 | |